RAMPE
BOOM
BARRA
GESTAENGE

HERBITEC — **VIGNE / VINEYARD / VINA / WEINBERG**

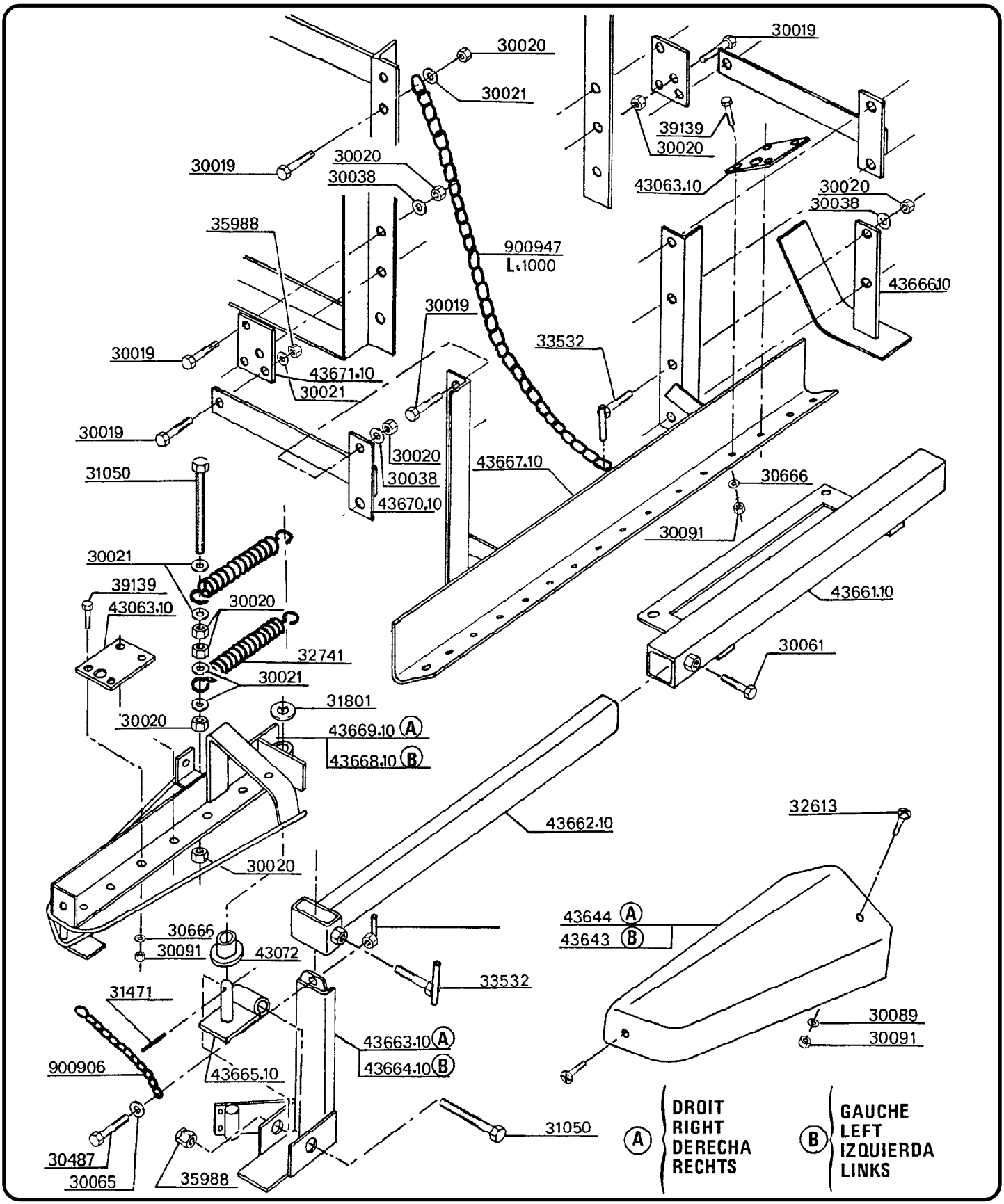

98182A

19.06.00

Tecnoma technologies

S.A. Capital 5872000F - B.P. 195 - 51206 EPERNAY - FRANCE
Tél. 03.26.51.99.99 - Fax : 03.26.51.83.51
R.C.S. EPERNAY B 350 484 309 - APE 293D